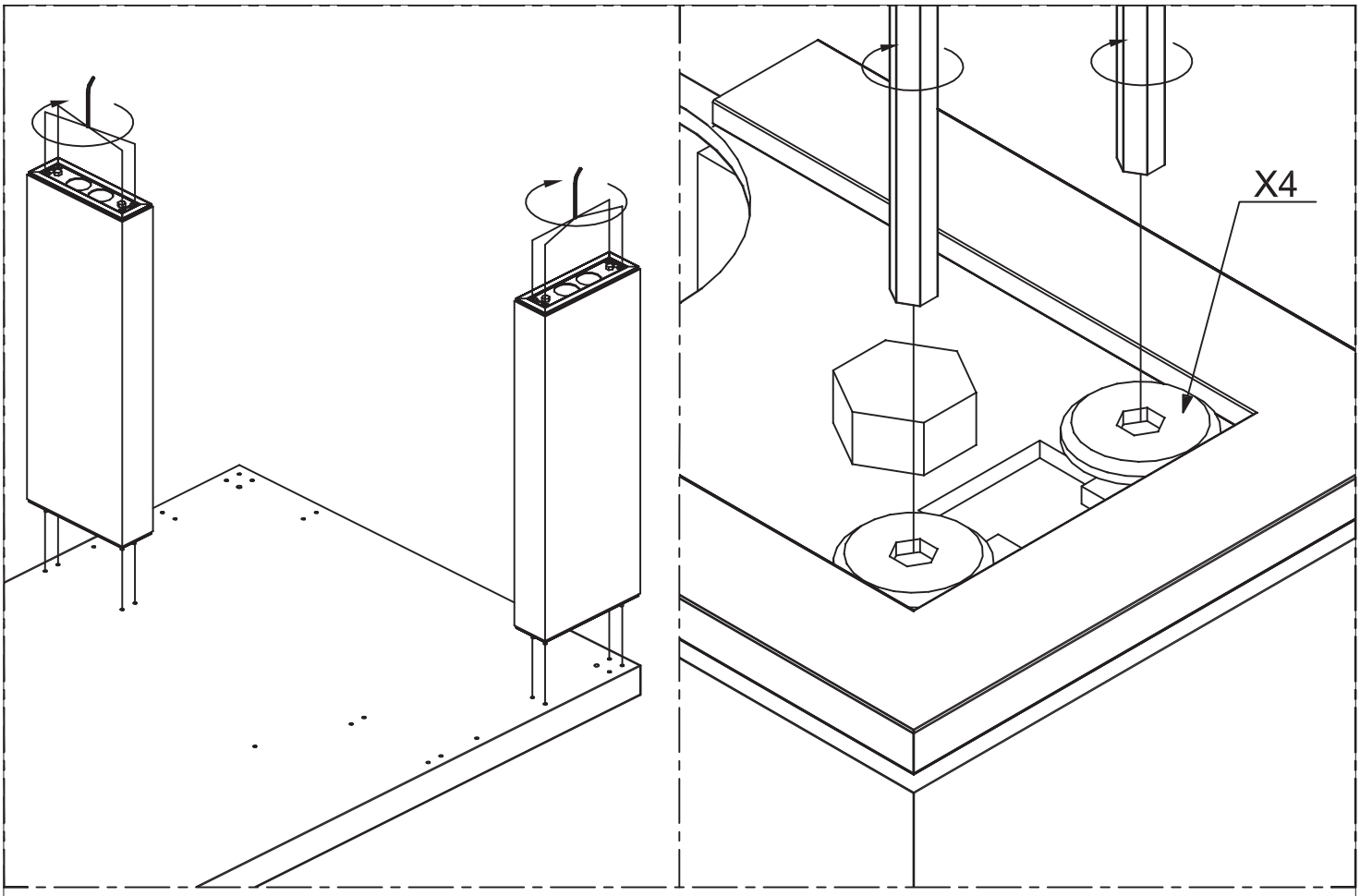




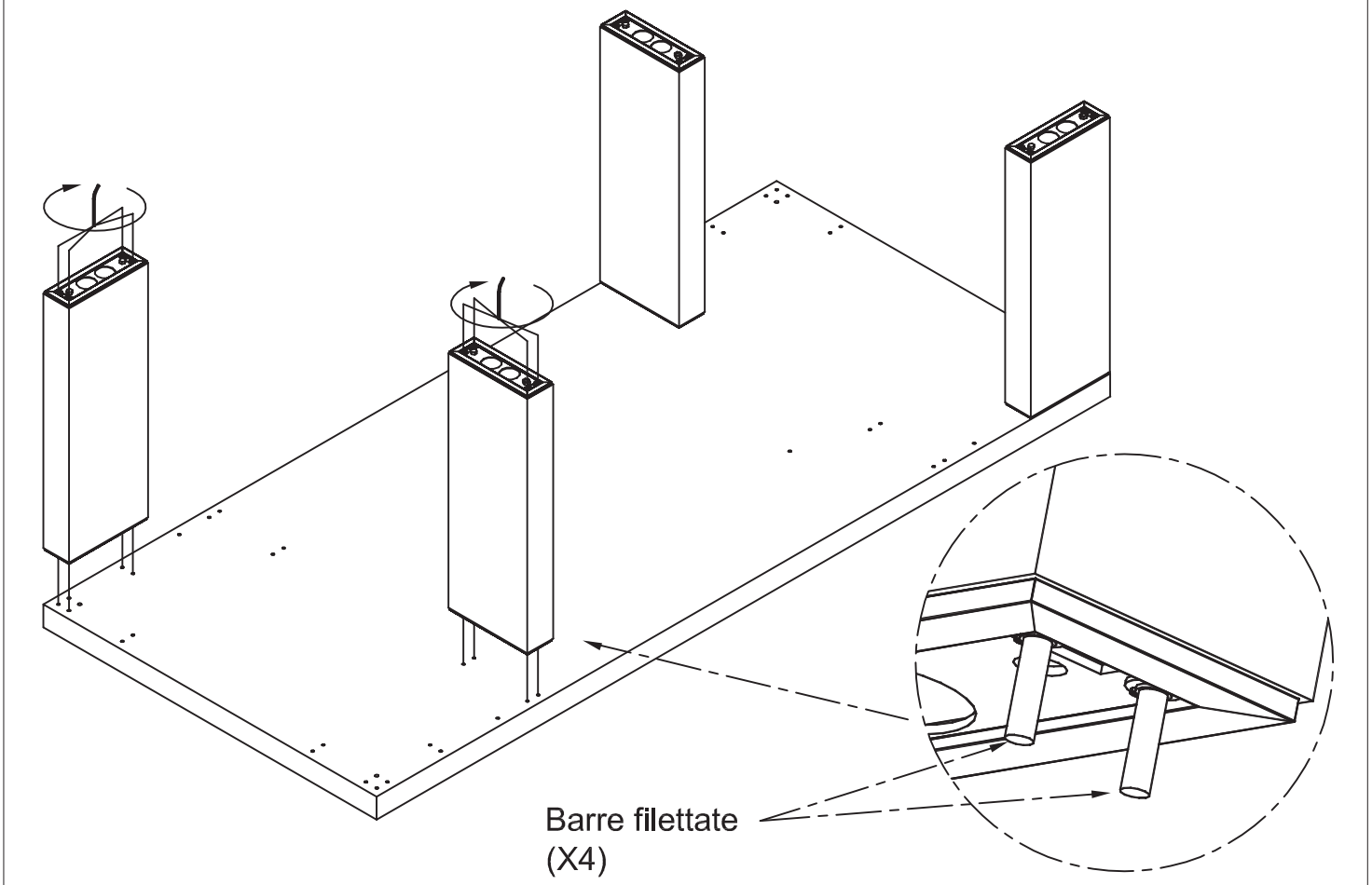


**ALEA s.r.l.**
via Col de Rust, 19 33070 Caneva - fraz. Sarone (PN) Italy
Tel.: ++39 0434 777303 - fax ++39 0434 779903
http://www.aleaoffice.com - e-mail: info@aleaoffice.com

**8TI0000010**

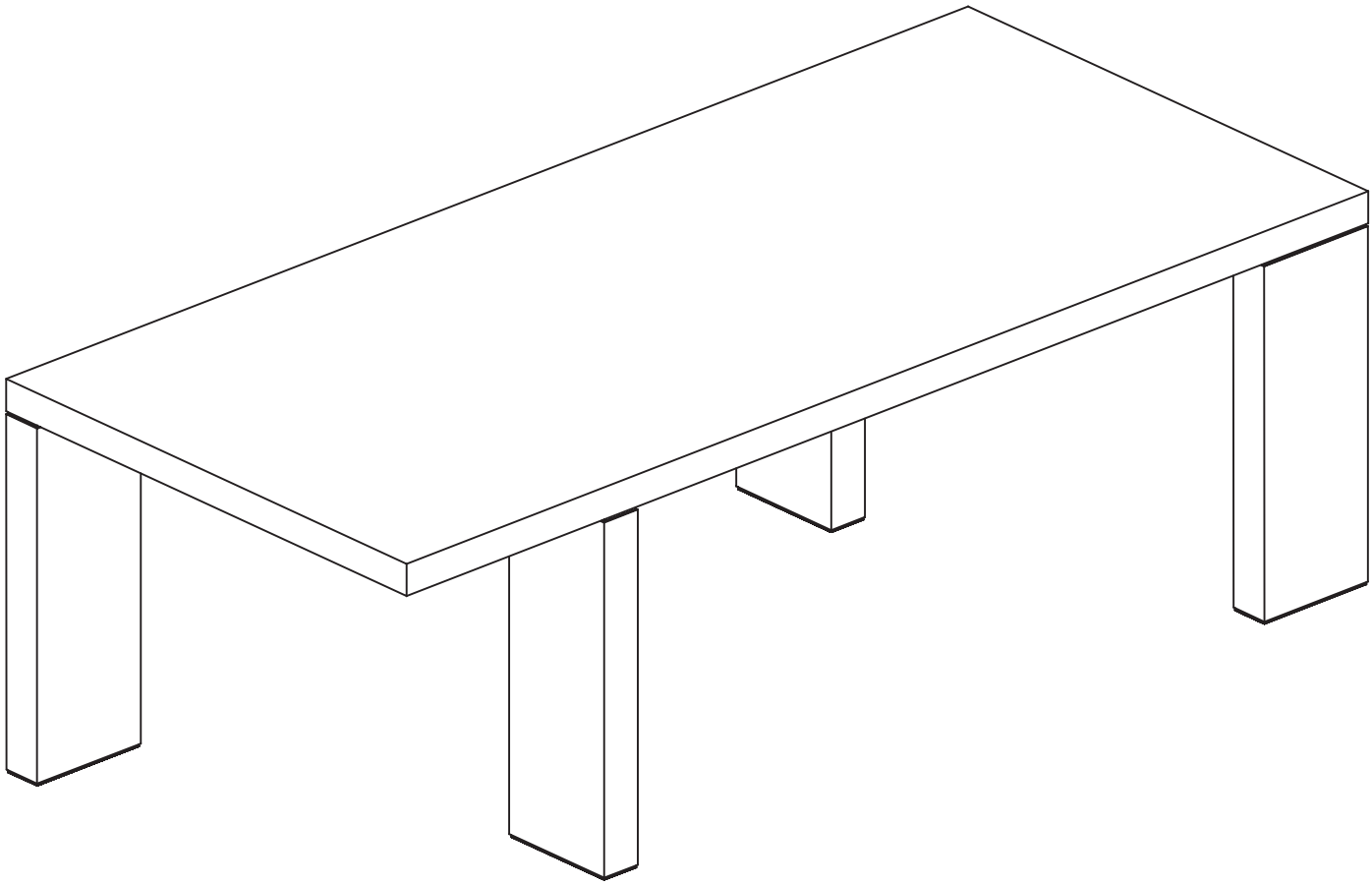

**ALEA s.r.l.**
via Col de Rust, 19 33070 Caneva - fraz. Sarone (PN) Italy
Tel.: ++39 0434 777303 - fax ++39 0434 779903
http://www.aleaoffice.com - e-mail: info@aleaoffice.com

**8TI0000010**

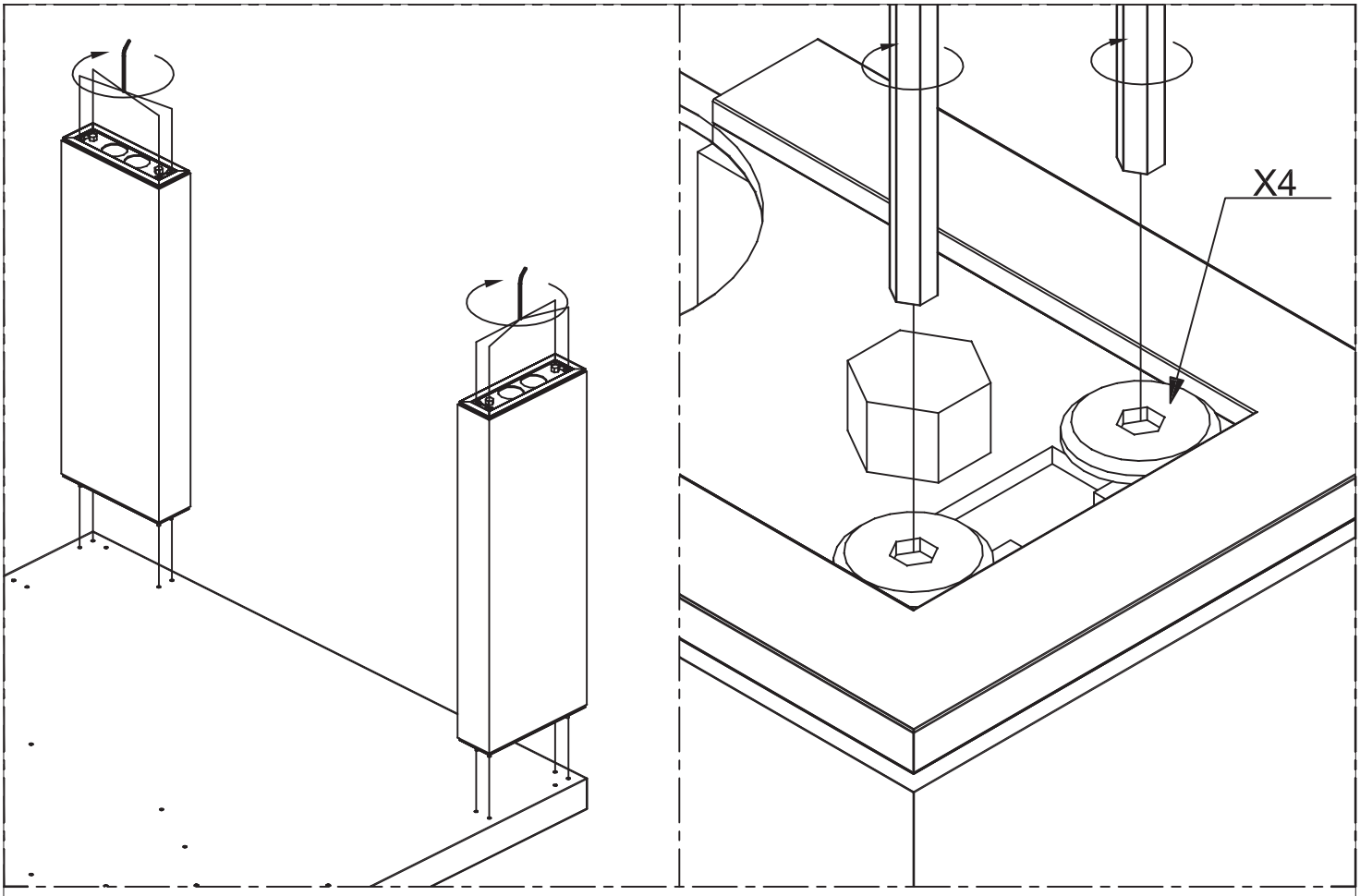




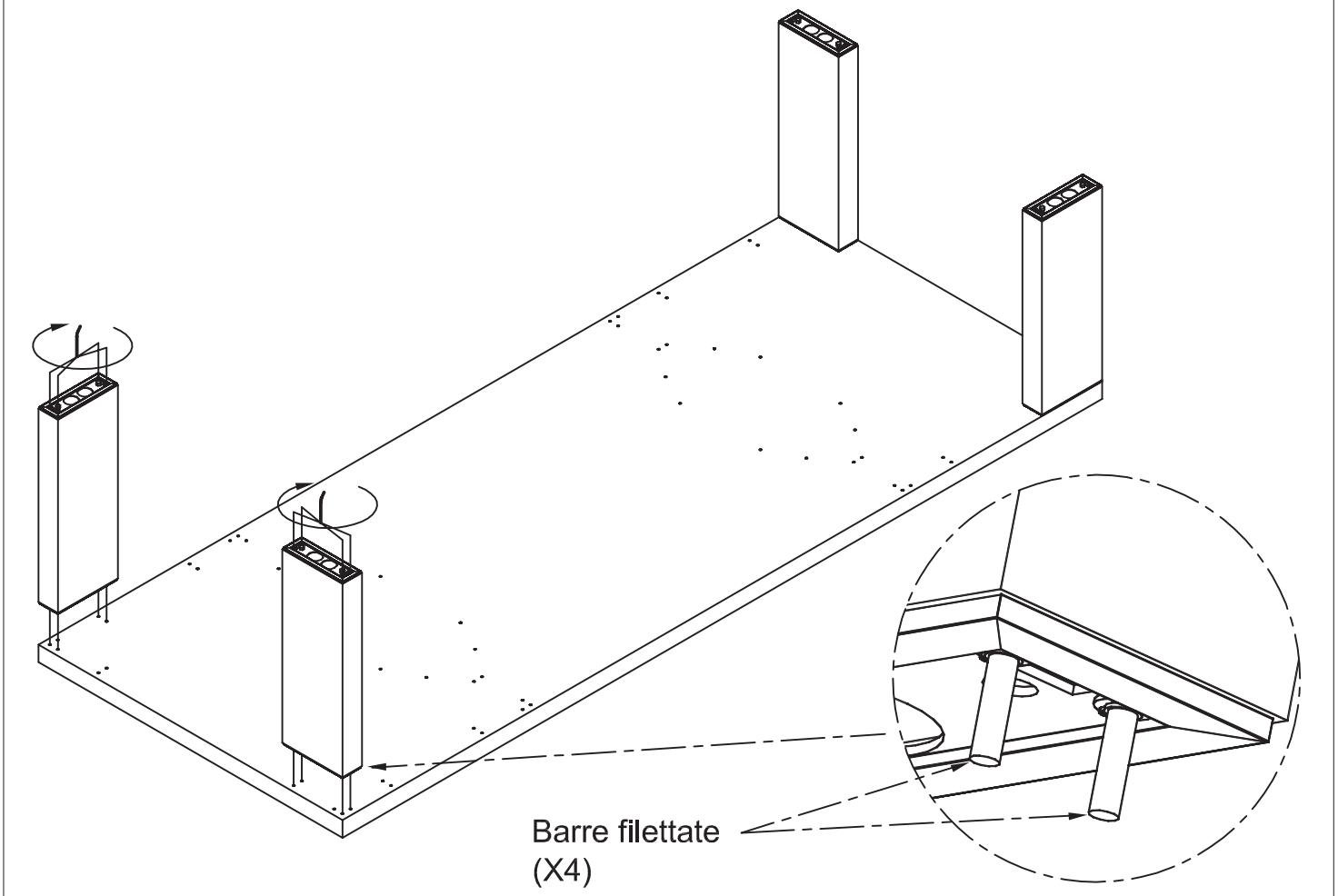


**ALEA s.r.l.**
via Col de Rust, 19 33070 Caneva - fraz. Sarone (PN) Italy
Tel.: ++39 0434 777303 - fax ++39 0434 779903
http://www.aleaoffice.com - e-mail: info@aleaoffice.com

**8TI0000010**

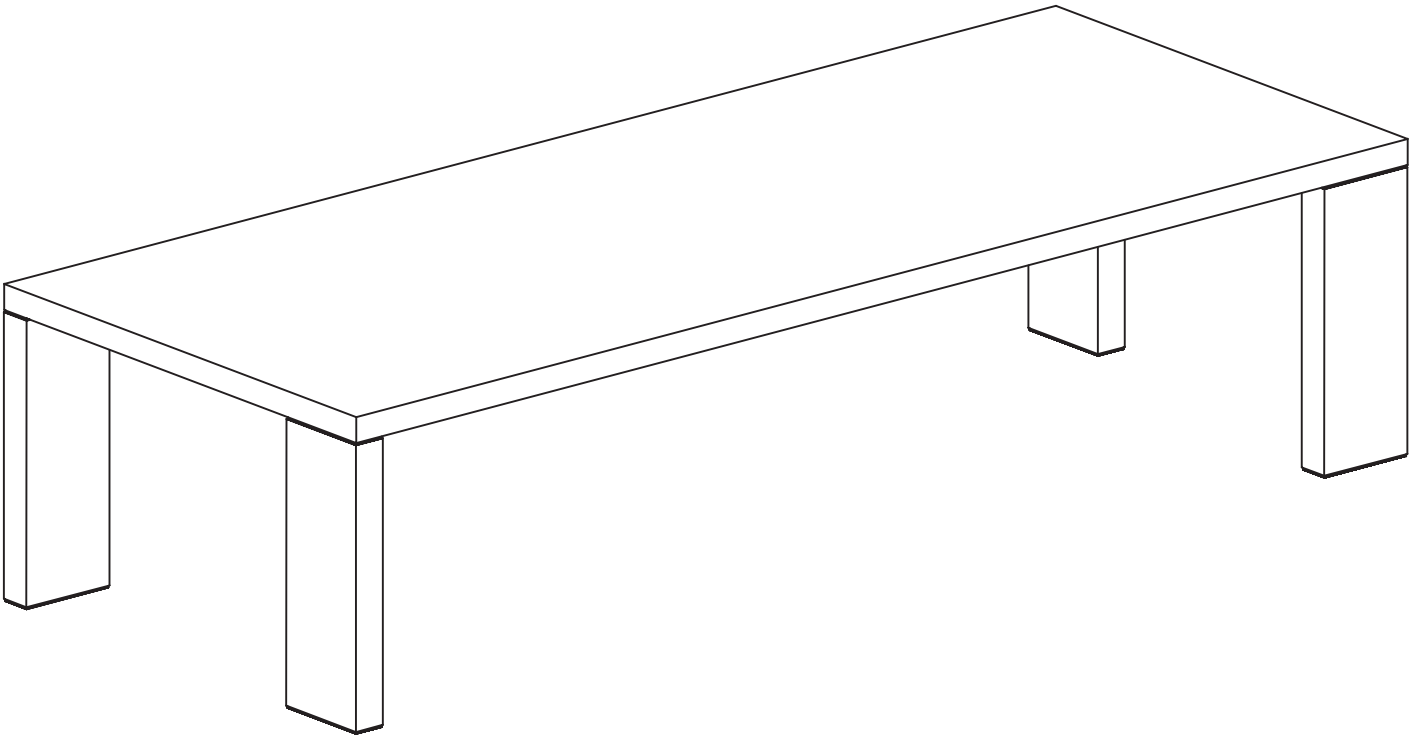

**ALEA s.r.l.**
via Col de Rust, 19 33070 Caneva - fraz. Sarone (PN) Italy
Tel.: ++39 0434 777303 - fax ++39 0434 779903
http://www.aleaoffice.com - e-mail: info@aleaoffice.com

**8TI0000010**

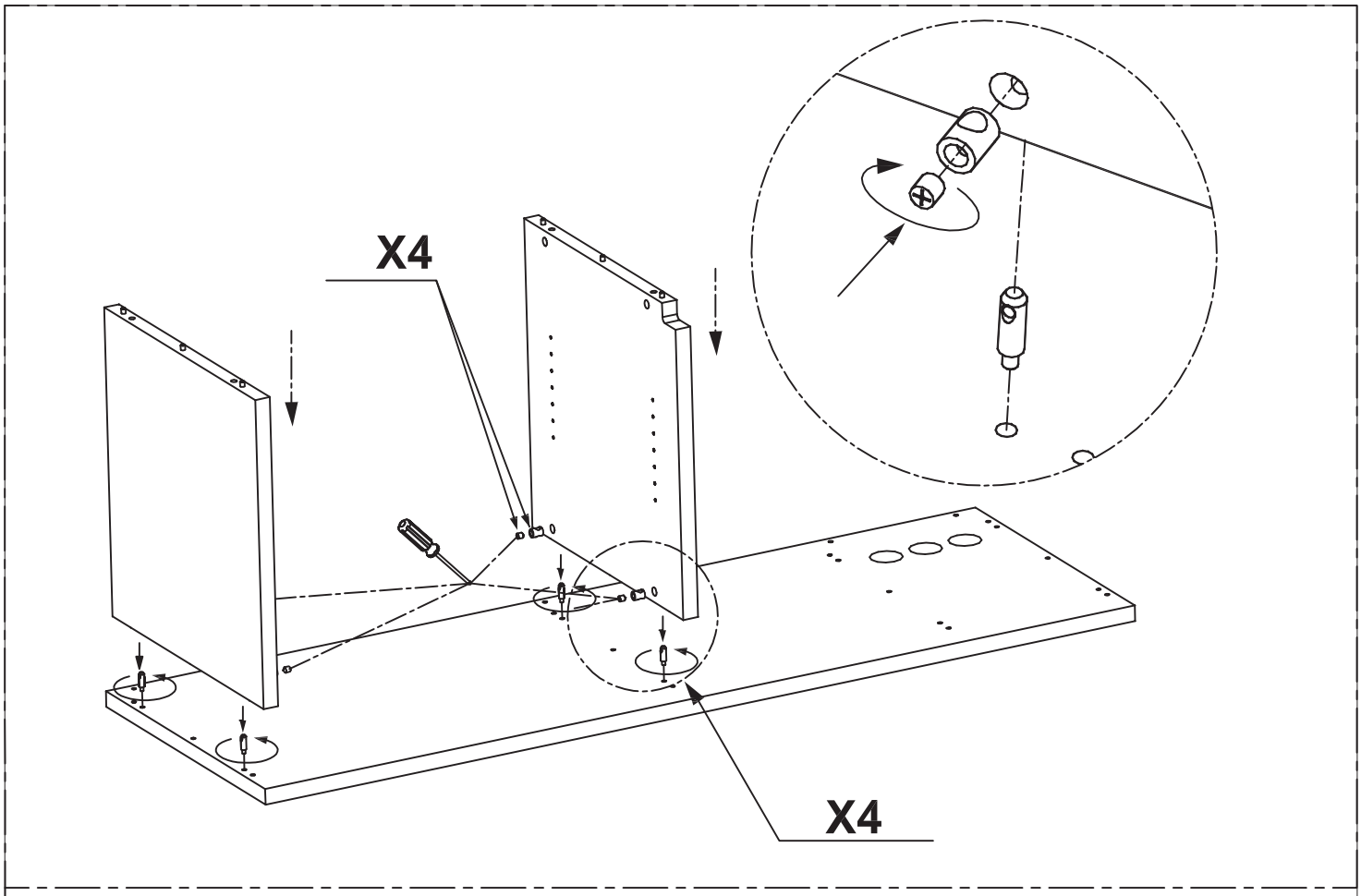


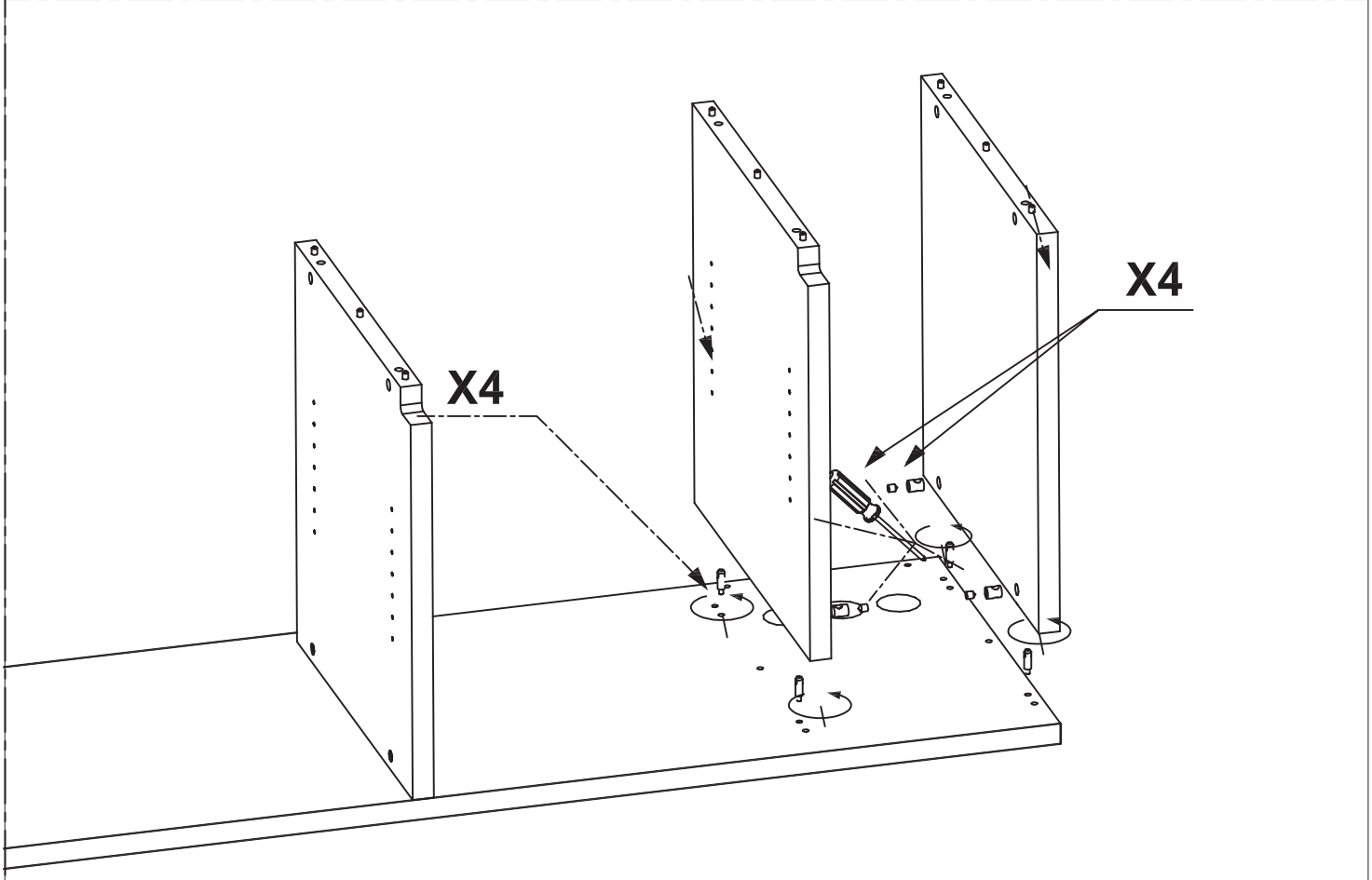


**ALEA s.r.l.**
via Col de Rust, 19 33070 Caneva - fraz. Sarone (PN) Italy
Tel.: ++39 0434 777303 - fax ++39 0434 779903
http://www.aleaoffice.com - e-mail: info@aleaoffice.com

**8TI0000080**

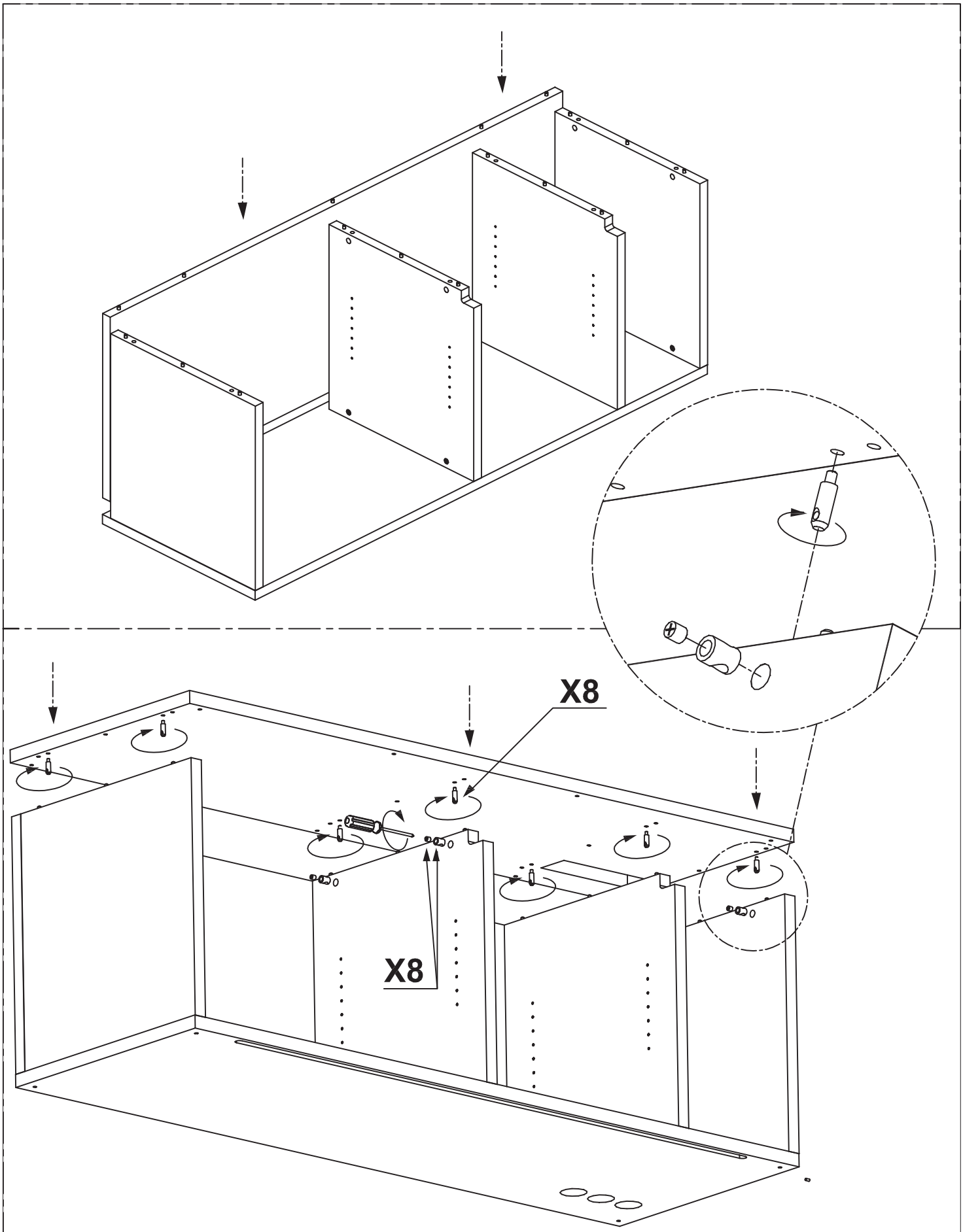


**ALEA s.r.l.**
via Col de Rust, 19 33070 Caneva - fraz. Sarone (PN) Italy
Tel.: ++39 0434 777303 - fax ++39 0434 779903
http://www.aleaoffice.com - e-mail: info@aleaoffice.com

**8TI0000080**

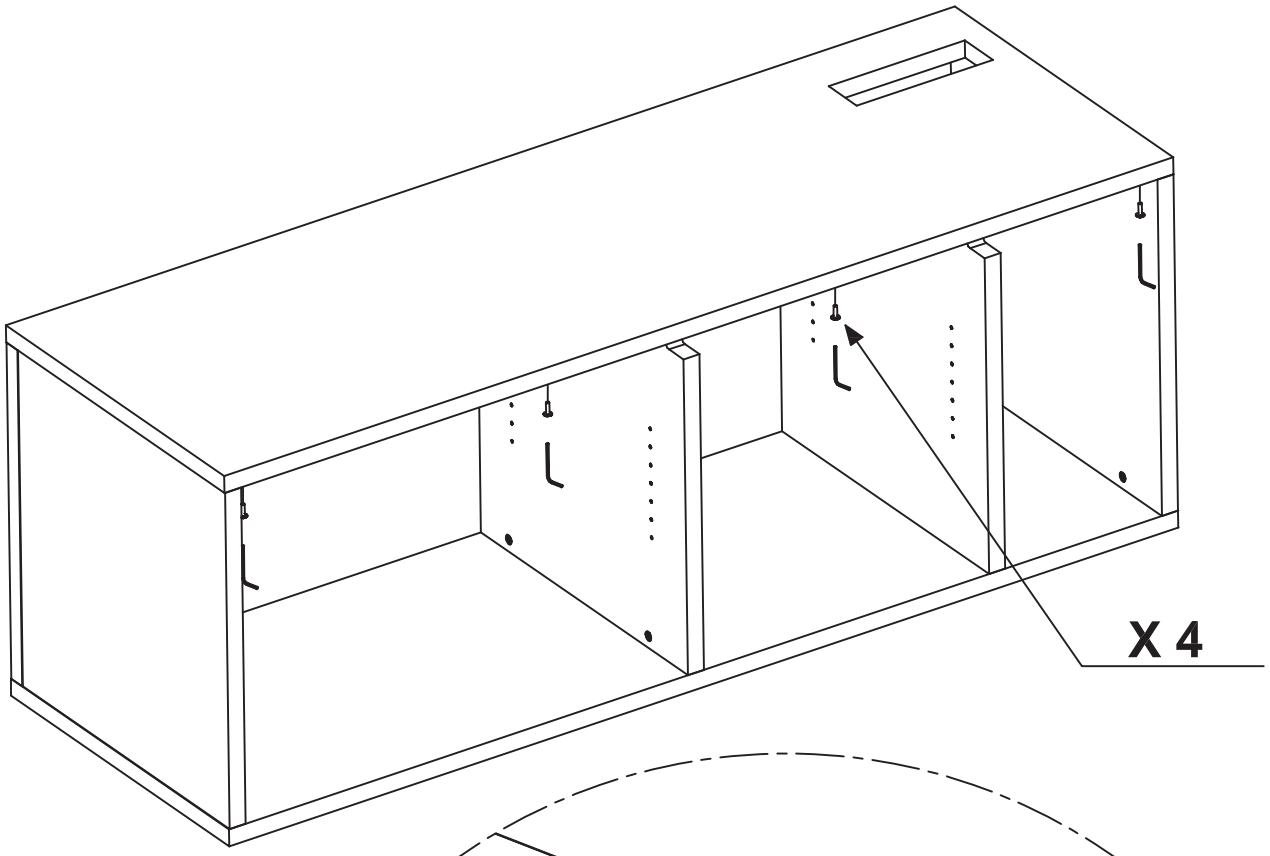


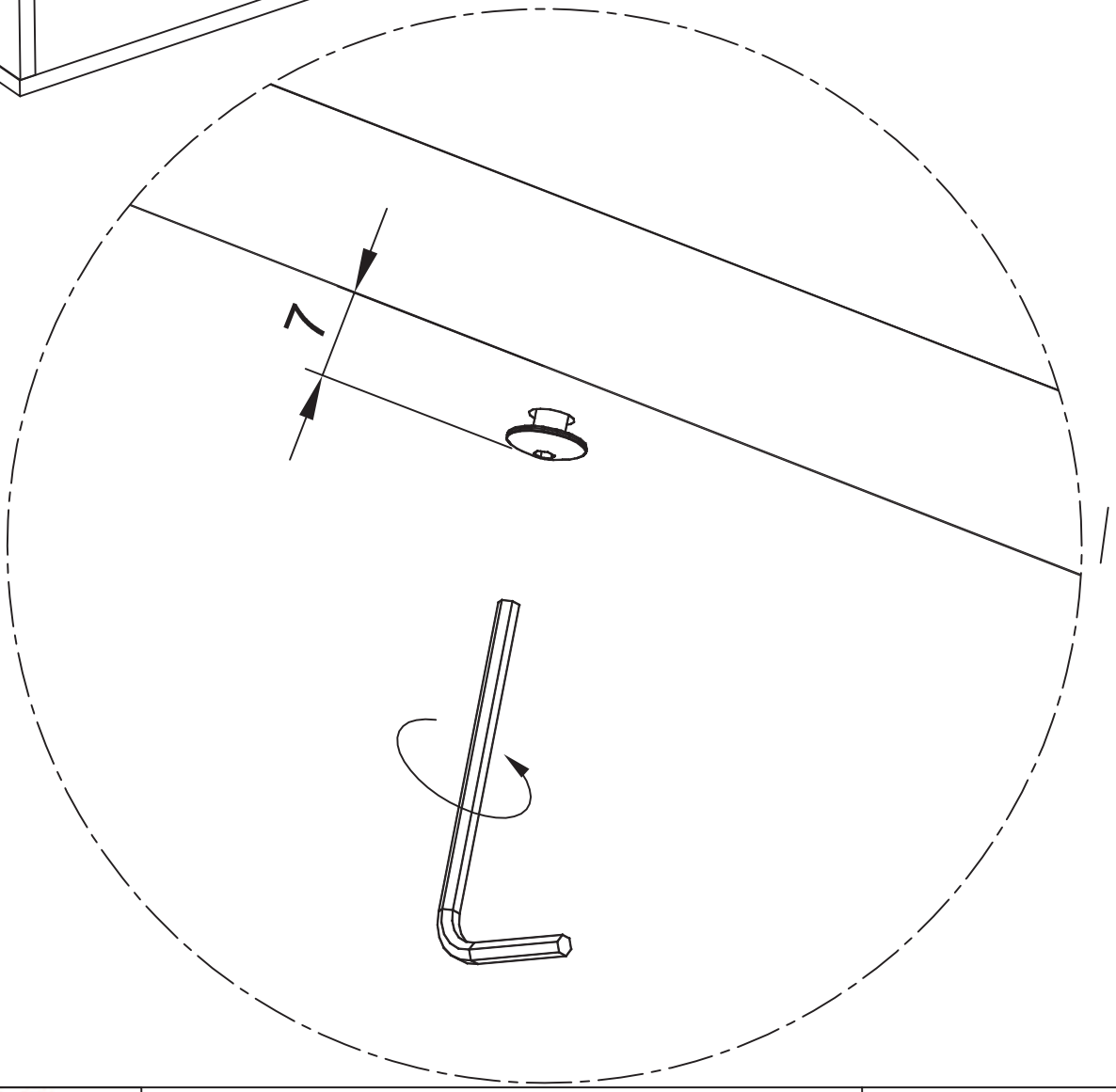


**ALEA s.r.l.**
via Col de Rust, 19 33070 Caneva - fraz. Sarone (PN) Italy
Tel.: ++39 0434 777303 - fax ++39 0434 779903
http://www.aleaoffice.com - e-mail: info@aleaoffice.com

**8TI0000080**

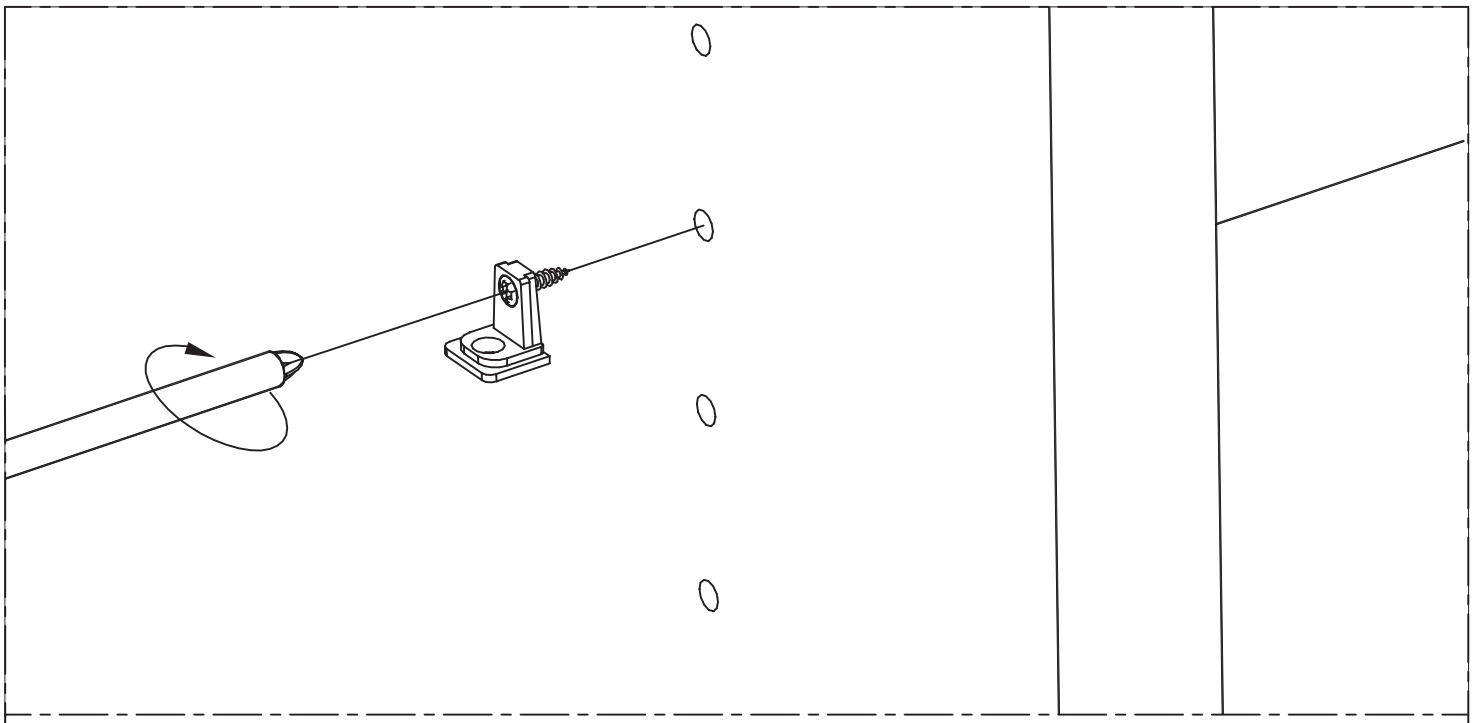

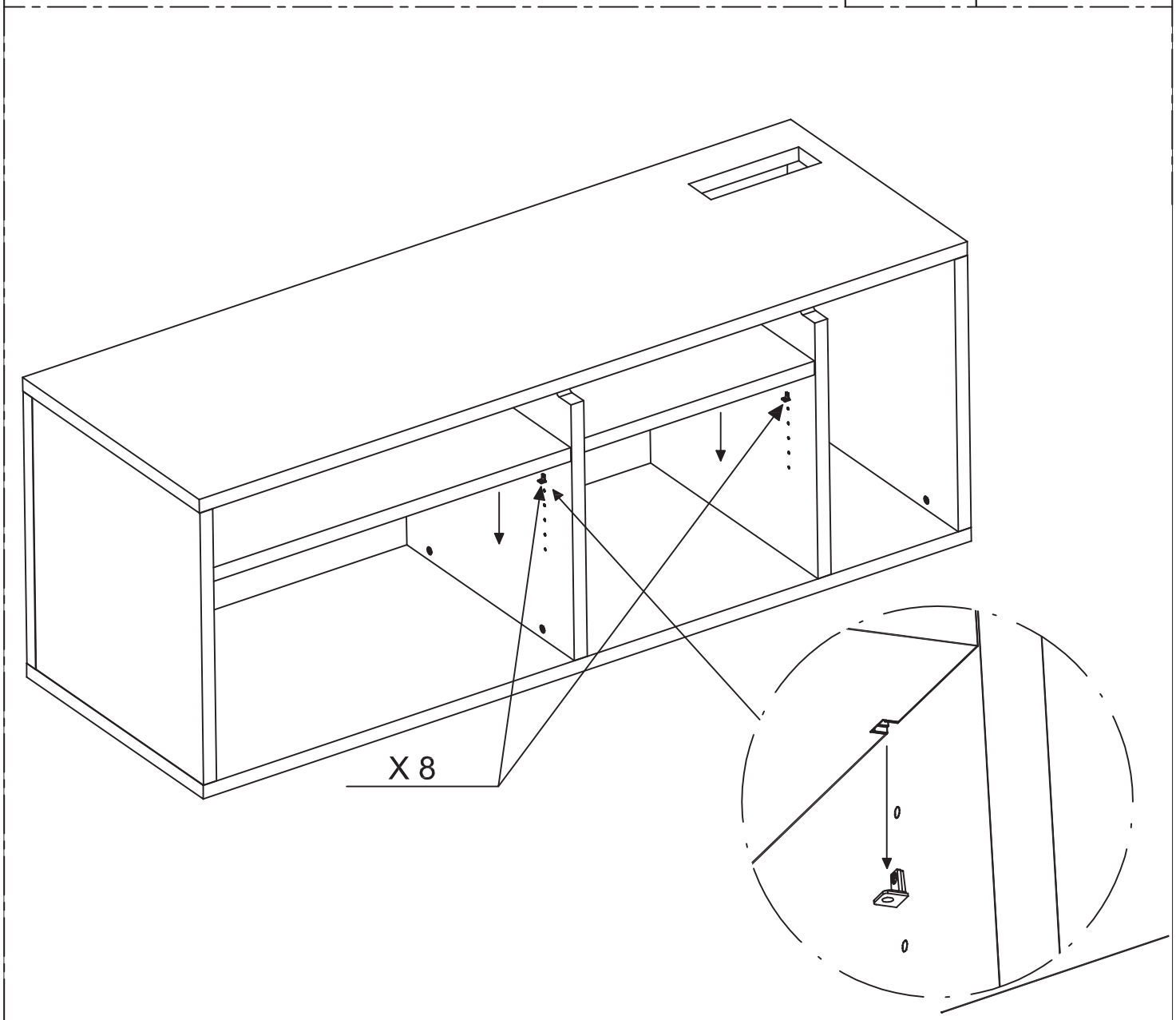


**ALEA s.r.l.**
via Col de Rust, 19 33070 Caneva - fraz. Sarone (PN) Italy
Tel.: ++39 0434 777303 - fax ++39 0434 779903
http://www.aleaoffice.com - e-mail: info@aleaoffice.com

**8TI0000080**

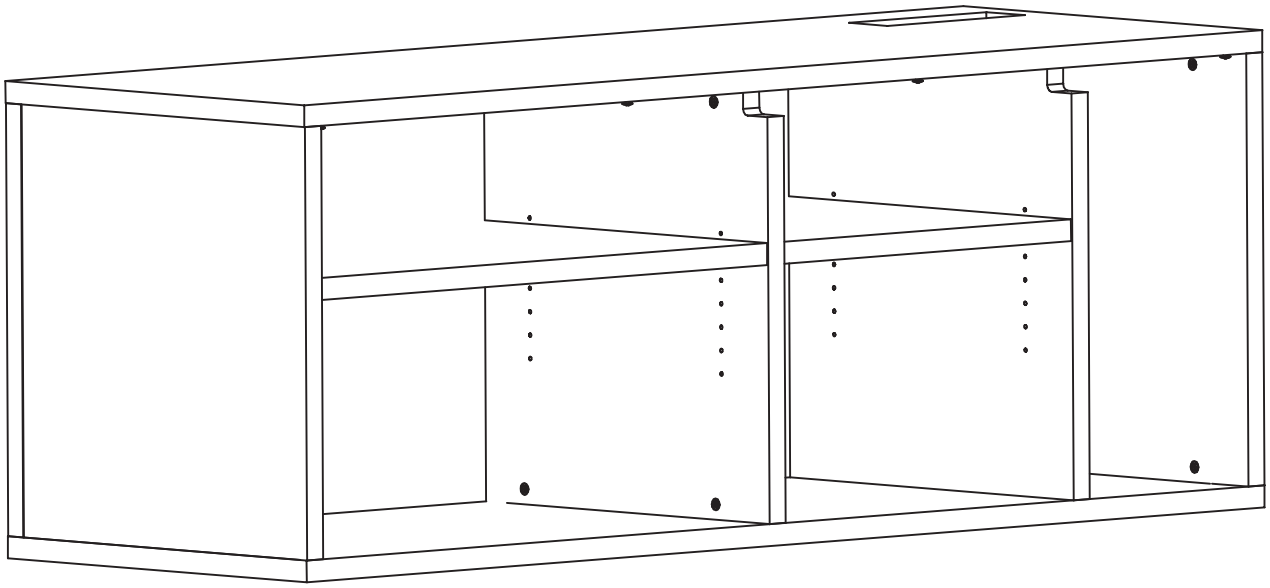

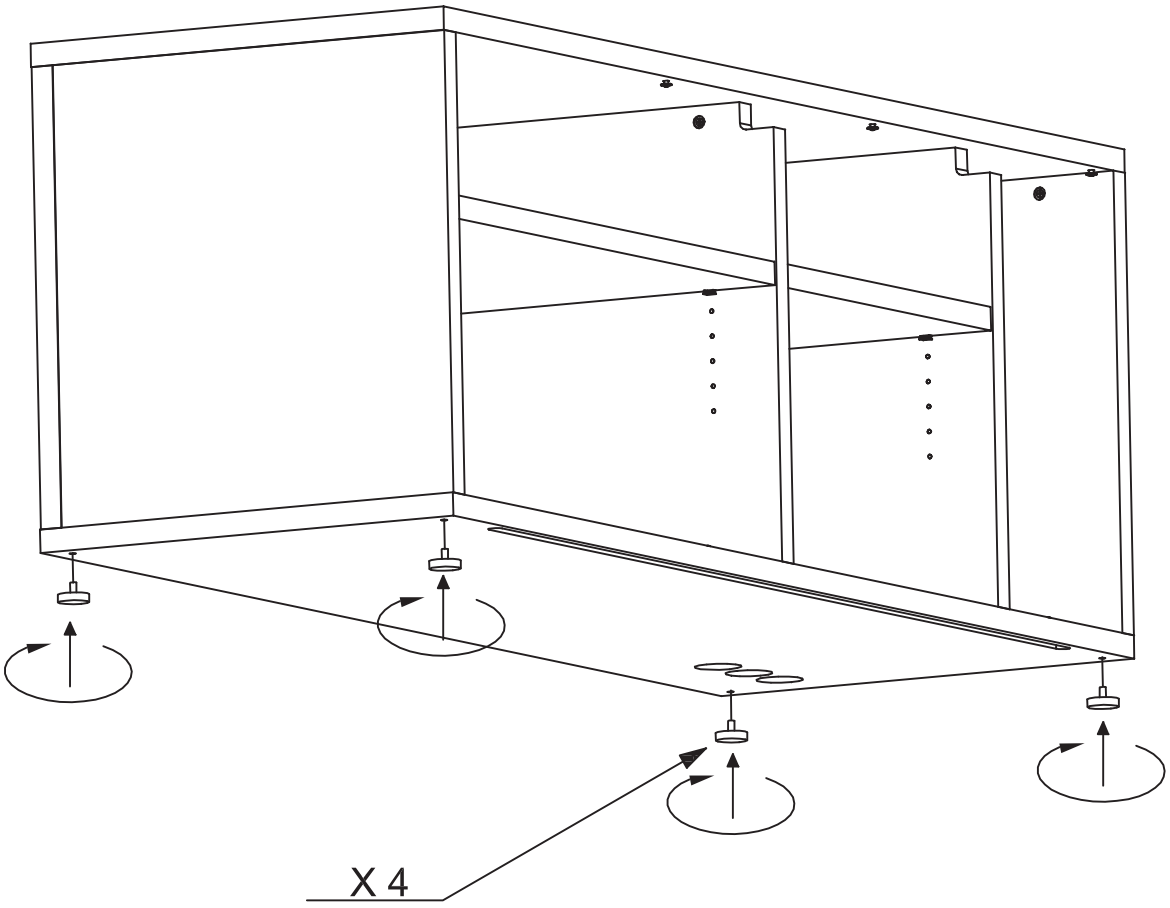


**ALEA s.r.l.**
via Col de Rust, 19 33070 Caneva - fraz. Sarone (PN) Italy
Tel.: ++39 0434 777303 - fax ++39 0434 779903
http://www.aleaoffice.com - e-mail: info@aleaoffice.com

**8TI0000080**

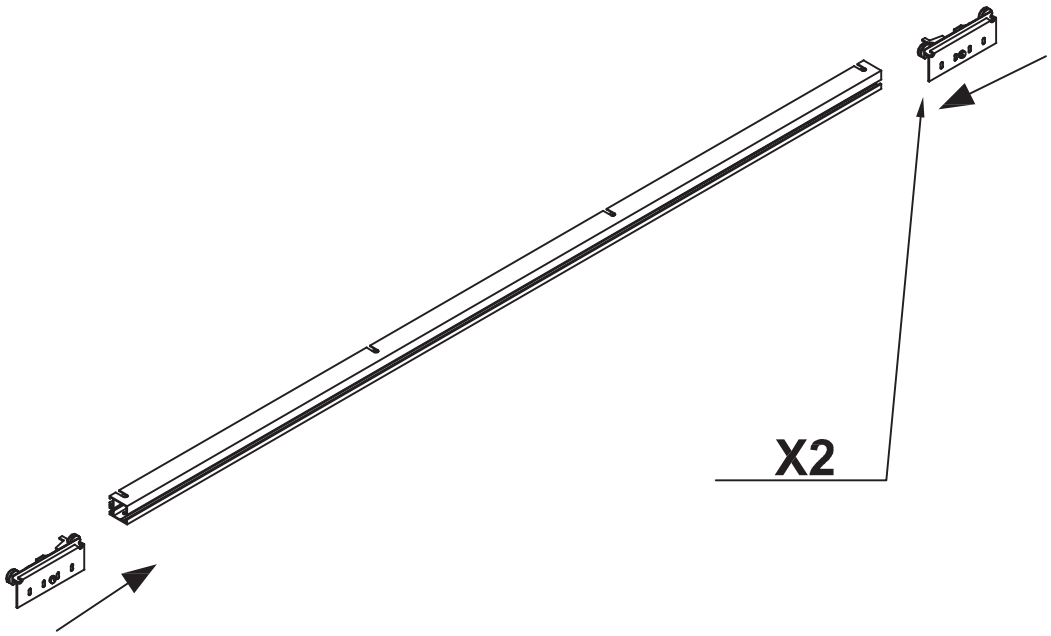


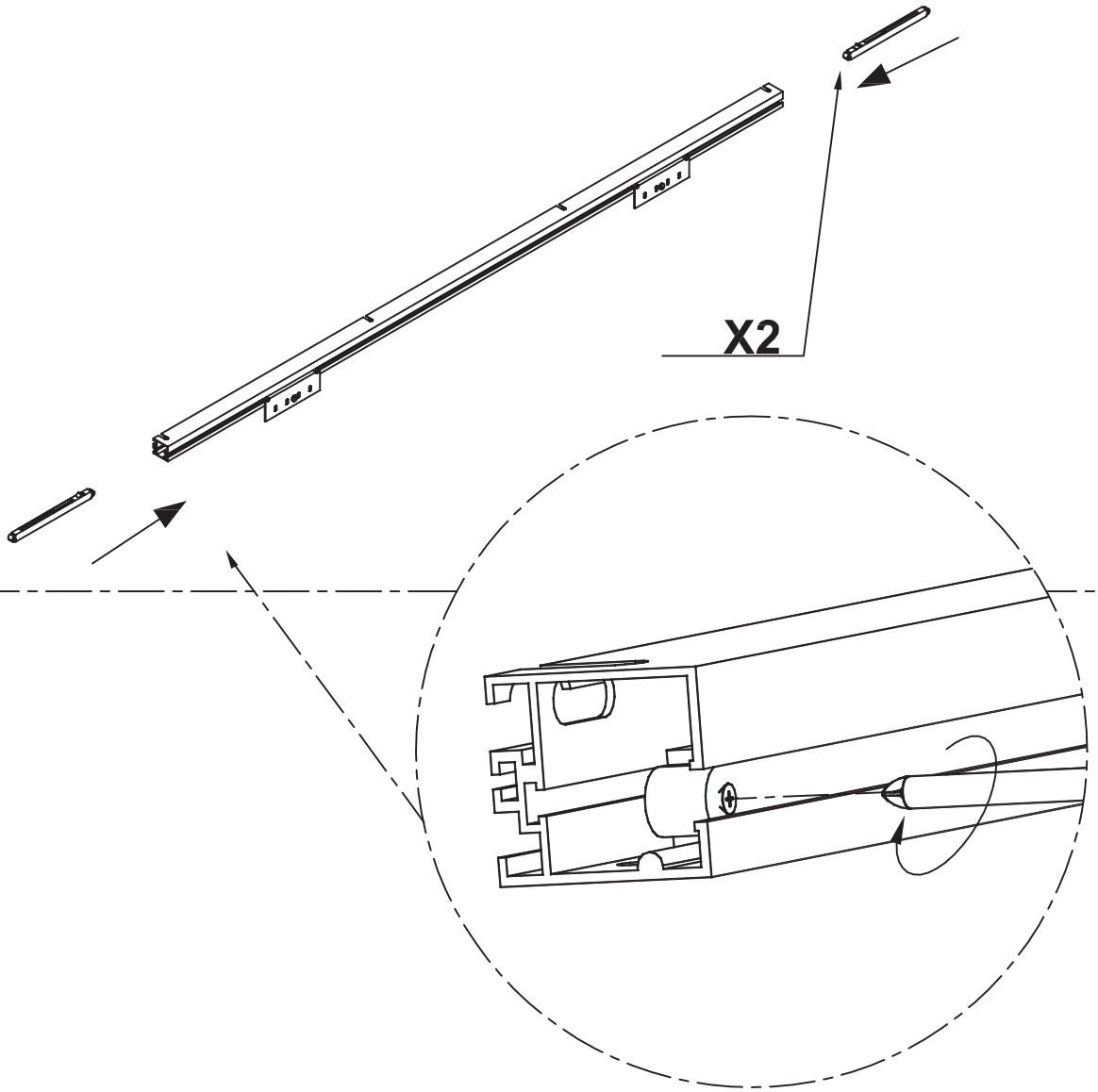


**ALEA s.r.l.**
via Col de Rust, 19 33070 Caneva - fraz. Sarone (PN) Italy
Tel.: ++39 0434 777303 - fax ++39 0434 779903
http://www.aleaoffice.com - e-mail: info@aleaoffice.com

**8TI0000080**

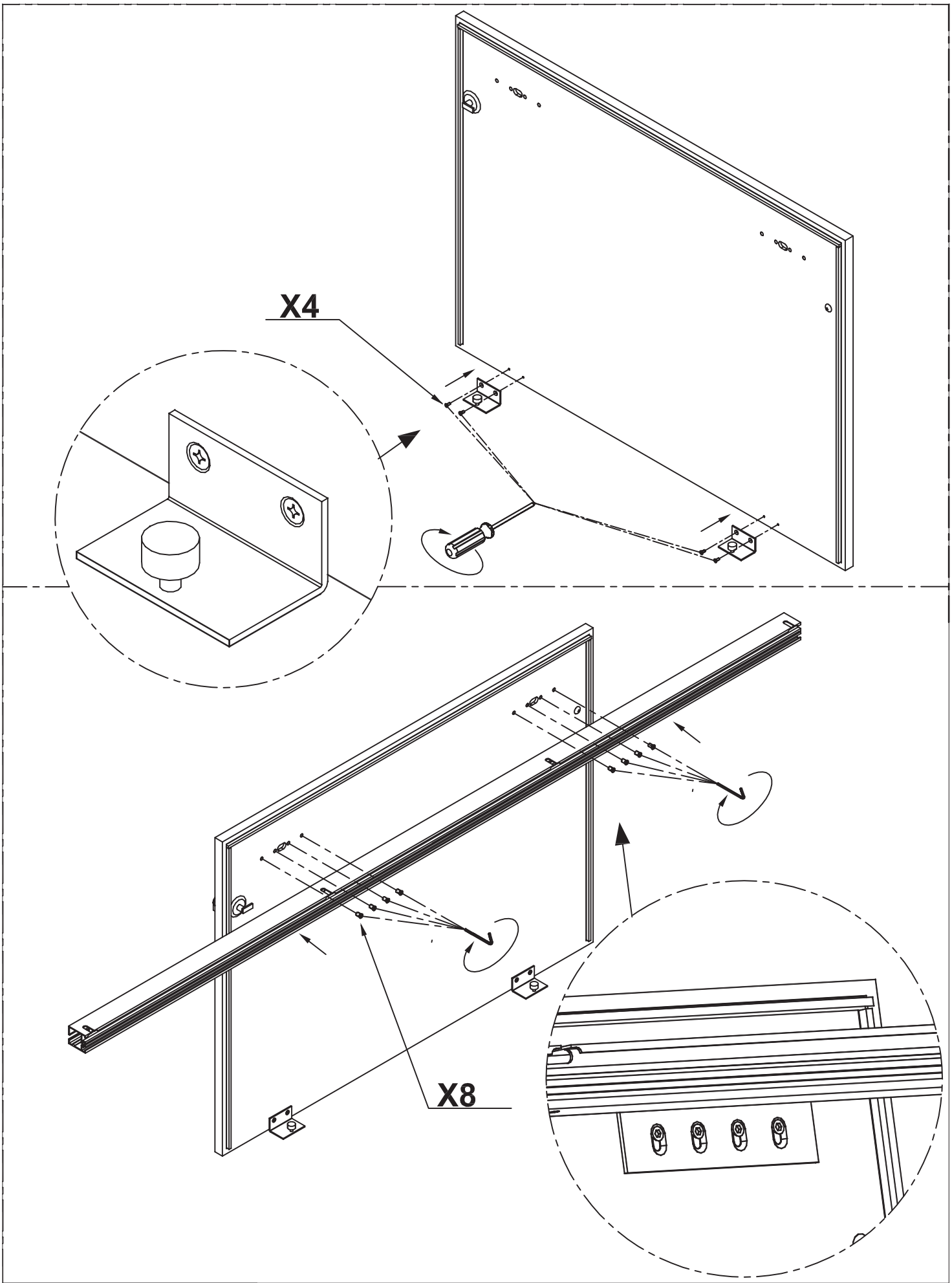


**ALEA s.r.l.**
via Col de Rust, 19 33070 Caneva - fraz. Sarone (PN) Italy
Tel.: ++39 0434 777303 - fax ++39 0434 779903
http://www.aleaoffice.com - e-mail: info@aleaoffice.com

**8TI0000080**

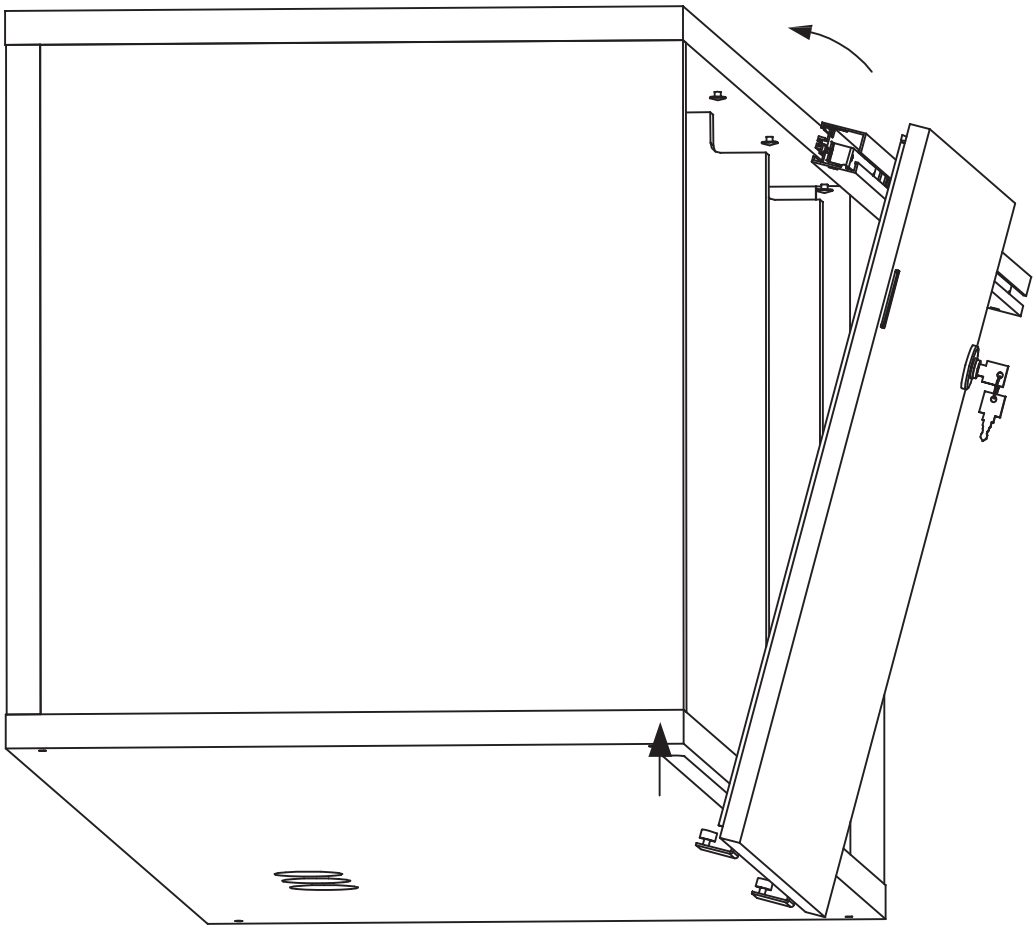

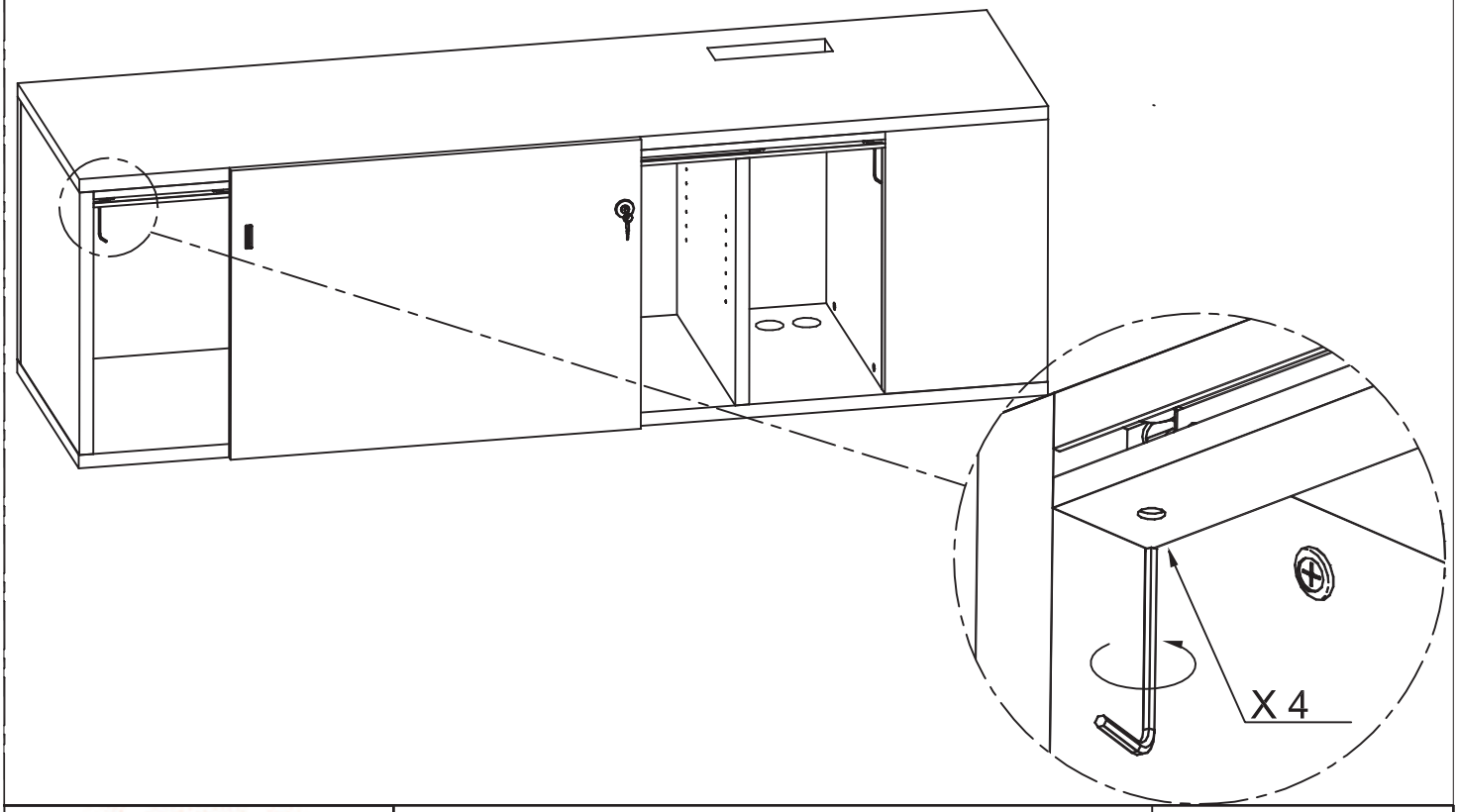


**ALEA s.r.l.**
via Col de Rust, 19 33070 Caneva - fraz. Sarone (PN) Italy
Tel.: ++39 0434 777303 - fax ++39 0434 779903
http://www.aleaoffice.com - e-mail: info@aleaoffice.com

**8TI0000080**